Emerald Environmental Technologies

ice^3 *FLUID TO FLUID HEAT PUMP*

IC-2545

SUBMITTAL DATA

rev.2 - 2.14.19

(888) 530-7713
1412 Route 175
Holderness, NH 03245.

ice^3, IC-2545, Fluid-to-Fluid R-410a Heat Pump
Engineering Guide Specifications

General Notes:

a. The liquid source fluid-to-fluid heat pump shall be a single packaged non-reversing heating / cooling unit containing an internal refrigerant by water subcooling heat exchanger for preheating non potable water (such as an ice resurfacer).
b. The unit shall be listed by a nationally recognized safety testing laboratory or agency, such as ETL. Testing shall be equal to CSA C22-2 or UL 427.
c. The IC-2545 liquid source fluid-to-fluid heat pump unit as manufactured by ***Emerald Environmental Technologies***, shall be designed to operate with evaporator entering liquid temperatures between 10°F (-12°C) and 70°F (21°C), and condenser entering liquid temperatures between 50°F (10°C) and 110°F (43°C).
d. The evaporator entering fluid temperature must be lower than the condenser entering fluid temperature.
e. Each unit shall be run-tested at the factory. Each unit shall be pallet mounted and stretch wrapped for shipping.

Refrigerant Circuit:

a. All units shall contain a sealed refrigerant circuit including a hermetically sealed scroll compressor with internal check valve, unidirectional electronically controlled thermal expansion valve assembly, three (3) stainless brazed plate fluid to refrigerant heat exchangers, factory-installed high and low pressure safety switches, high and low side service ports, and a liquid line filter-drier.
b. The refrigerant circuit shall utilize the tight closing electronic expansion valve to prevent migration of refrigerant to the evaporator when the compressor is not operating.
c. Low-pressure lockout switch shall be automatic reset with interruption to compressor contactor power supply.
d. High-pressure lockout switch shall be manual reset.
e. The electronic thermal expansion valve assembly shall provide proper superheat over the liquid temperature range with minimal "hunting". The electronic thermal expansion valve shall be designed for single direction refrigerant flow. Bi-directional valves shall not be permitted.
f. Externally mounted pressure controlled fluid regulating flow valves are not acceptable.
g. The fluid to refrigerant evaporator and refrigerant suction lines shall be insulated with 1” (25.4mm) thick closed cell foam insulation (Armaflex) to prevent condensation at low liquid temperatures.
h. Compressor shall be designed for refrigeration duty, with internal isolation and mounted on rubber vibration isolators. Compressor shall be manufactured with oil-sight glass.
i. Compressor motor shall have internal motor protection and shall be three phase.

j. Unit shall be equipped with a three-phase line voltage monitor protecting against phase loss/reversal, unbalance and hi/lo voltage.
k. Compressor shall be designed for use with R410A refrigerant (25.8 lbs). Refrigerant piping shall be connected to compressor in such a manner to permit absorption of compressor vibration and start-up torque without stress on piping.
l. Refrigerant piping shall be clamped and supported to minimize vibration and prevent stress cracking.
m. The liquid to refrigerant heat exchangers shall be brazed plate type constructed with type 316 stainless steel plates and brazed with copper. The heat exchangers shall be designed for minimum operation from -321°F (-196°C) to 350°f (177°C), and be capable of withstanding 650 PSIG (4480kPa) working pressure on liquid and refrigerant sides. Heat exchangers shall be manufactured with built in refrigerant distributor tube with calibrated orifices to distribute gas evenly throughout heat exchanger, and be designed for use with R410A refrigerant.
n. Each unit shall be factory run tested for a minimum of two hours under actual load conditions, including:

- Amperage and voltage draw
- Refrigerant Pressures
- Sight Glass Status
- Operation and Verification of High/Low Pressure Controls and Voltage phase monitor
- Entering and Leaving Fluid Temperatures for Condenser, Evaporator and Subcooler
- Superheat Measurement
- Operation of Compressor Overload Protection

Electrical:

a. Controls and safety devices will be factory wired and mounted within the unit.
b. Controls shall include digital controller, expansion device controller for electronic EXV, user interface, compressor contactor, 24 VAC control circuit, built-in fuse protection, anti-rotation protection and voltage/loss of phase protection.
c. Electrical circuit shall include fault light indicator light and green running indicator light on outside of cabinet, and shall include an "on-off-auto" selector switch mounted inside the heat pump cabinet.
d. The digital controls can be provided with optional BACnet, MODbus and/or Lonworks cards for remote BMS control.
e. The system can be provided with a full digital control system to act as a global controller.

Electrical Specifications	Compressor				Total Unit FLA	Minimum Circuit Ampacity	Maximum Fuse Size
Voltage/Phase/Hz	Max. RLA	RLA - Ice Duty	RLA - A/C Duty	LRA			
460/3/60	64.1	50.2	54.9	299	85.0	90.0	125
575/3/60	51.3	40.2	43.9	229	67.8	70.0	100

Fluid Piping:

a. Evaporator and Condenser supply and return fluid connections shall be 2-1/2” MPT threaded fittings.
b. Non potable water connections to the subcooling heat exchanger shall be 3/4” to a provided press connection ball valve.
c. All Fluid piping shall be insulated by customer on site to prevent condensation at low liquid temperatures.
d. Pressure/temperature ports shall be included on both condenser and evaporator fluid inlets and outlets.

Casing and Cabinet:

a. The cabinet shall be fabricated from 16 gauge polished stainless steel. The cabinet shall have removable access panels on three sides, and a hinged access door over the electrical cabinet.
b. The interior shall be insulated with ½” (13 mm) thick multi-density, coated glass fiber, with edges sealed or tucked under flanges.
c. All units shall have 7/8" (22 mm) and 1 1/8" (29 mm) knockouts for entrance of low and high voltage wiring.
d. Cabinet dimensions shall be less than 31" (788 mm) in width or depth to permit units to be easily moved through a standard size door.
e. The unit shall be built on a 14 gauge stainless steel baseplate. The cabinet shall be built to allow service access to the internal components. The baseplate shall have skids to allow for forklift handling the unit and to sit the unit on the floor or mount to a stand. This design minimizes the physical space requirements of the units.

Factory Options:

Mounting Rack:

Unit(s) can be mounted on a painted welded carbon steel rack supplied by the manufacturer. If mounting racks are selected, there is additionally a complete pre-piped, insulated and wired option including valves and pump that allows for ease of installation on site.

Pump:

Unit(s) can be supplied with external pump and/or internally mounted pump contactor.

Control Valves:

Unit(s) can be supplied with inlet and outlet hot and cold motorized control valves.

Warranty Information:

Emerald Environmental Technologies has great confidence in the quality of the ***ice³*** unit and this is reflected in our warranty. The unit shall be warranted by the manufacturer against defects in materials and workmanship for a period of one (1) year from date of delivery to original purchaser-user including the compressor, condenser, evaporator and expansion valve. An additional year of guarantee will be extended if factory startup is performed. The stainless steel cabinet shall be warranted for life against defect in materials and workmanship, excluding damage due to rough handling, abuse, accident or casualty loss, chlorine or salt air exposure, airborne contaminants or outdoor installation. Other warranty options are available, please contact manufacturer for details.

ice3 - IC-2545 Heat Pump Performance Data

rev. 1/2/2019

Evaporator				Condenser				Heating & Cooling Capacity							
EFT	LFT	Flow	PD	EFT	LFT	Flow	PD	Heating Capacity	COPh	EERh	Cooling Capacity	COPc	EERc	kW	kW/ton cooling
(°F / °C)	(°F / °C)	USGPM / L/min	(ft / kPa)	(°F / °C)	(°F / °C)	USGPM / litres/s	(ft / kPa)	(MBH / kW)			(MBH / kW)				
20.0 / -6.66	14.2 / -9.8	120 / 7.57	11.8 / 35.1	88.5 / 31.3	95 / 35	120 / 7.57	6.1 / 18.2	356.0 / 104.2	3.6	12.4	314.7 / 92.1	3.2	10.2	29	1.1
20.0 / -6.66	14.2 / -9.8	120 / 7.57	11.8 / 35.1	93.7 / 34.2	100 / 37.7	120 / 7.57	6.1 / 18.2	350.6 / 102.6	3.4	11.5	313.2 / 91.7	3.0	10.3	30.5	1.16
20.0 / -6.66	14.4 / -9.7	120 / 7.57	11.8 / 35.1	98.8 / 37.1	105 / 40.5	120 / 7.57	6.1 / 18.2	344.2 / 100.7	3.1	10.7	310.0 / 90.7	2.8	9.6	32.4	1.25
18.0 / -7.77	12.0 / -11.1	120 / 7.57	11.8 / 35.1	85.0 / 29.4	91.6 / 33.1	120 / 7.57	6.1 / 18.2	354.9 / 103.9	3.2	11.2	312.0 / 91.3	3.3	11.4	27.5	1.05
18.0 / -7.77	12.4 / -10.8	120 / 7.57	11.8 / 35.1	88.7 / 31.5	95 / 35	120 / 7.57	6.1 / 18.2	347.5 / 101.7	3.5	12	305.0 / 89.3	3.1	10.5	29	1.14
18.0 / -7.77	12.4 / -10.8	120 / 7.57	11.8 / 35.1	93.8 / 34.3	100 / 37.7	120 / 7.57	6.1 / 18.2	342.5 / 100.2	3.3	11.3	303.3 / 88.8	2.9	10.0	30.4	1.2
18.0 / -7.77	12.5 / -10.8	120 / 7.57	11.8 / 35.1	99 / 37.2	105 / 40.5	120 / 7.57	6.1 / 18.2	336.3 / 98.4	3.2	10.9	300.1 / 87.8	2.8	9.7	30.8	1.23
55.0 / 12.77	44.7 / 7.0	120 / 7.57	6.5 / 19.4	85 / 29.4	95.5 / 35.2	120 / 7.57	6.1 / 18.2	582.2 / 170.4	5.5	18.8	564.4 / 165.2	5.3	18.2	31.4	0.66
55.0 / 12.77	44.8 / 7.1	120 / 7.57	6.5 / 19.4	90 / 32.2	100.3 / 37.9	120 / 7.57	6.1 / 18.2	574.8 / 168.3	5.2	17.9	554.8 / 162.4	5	17.1	32.5	0.7
55.0 / 12.77	45.1 / 7.2	120 / 7.57	6.5 / 19.4	95 / 35	105.1 / 40.6	120 / 7.57	6.1 / 18.2	562.4 / 164.6	4.8	16.4	538.6 / 157.7	4.5	15.6	34.4	0.77

Perfmormance and Pressure drop calculated using 40% Propylene Glycol as the test fluid w/ Subcooler operational. Multipliers for other fluids are as follows:

	Performance	Pressure Drop
Water	*x 1.11*	x .691
30% Propylene Glycol	*x 1.03*	x .892
40% Ethylene Glycol	*x 1.04*	*x .874*
30% Ethylene Glycol	*x 1.05*	*x .813*

Non Potable Water Preheater / Refrigerant Subcooler Performance

Water Side				Refrigerant Side					
EWT	LFT	Flow	PD	ERT	LRT	Flow	PD	Heating Capacity	
(°F / °C)	(°F / °C)	USGPM / L/min	(ft / kPa)	(°F / °C)	(°F / °C)	LB/H	(PSI / kPa)	(MBH / kW)	
50 / 10	90 / 32.2	2.6 / 0.16	0.06 / 0.41	98 / 36.6	64 / 17.7	3808	0.153 / 1.05	53.8 / 15.7	20° EFT, Refrigeration Duty
50 / 10	90 / 32.2	3.0 / 0.18	0.08 / 0.55	102 / 38.8	64 / 17.7	3676	0.144 / 0.99	58.5 / 17.1	20° EFT, Refrigeration Duty
50 / 10	93 / 32.2	3.0 / 0.18	0.07 / 0.48	107 / 41.6	65 / 17.7	3698	0.152 / 1.04	67.1 / 19.6	20° EFT, Refrigeration Duty
50 / 10	93 / 32.2	4.0 / 0.25	0.13 / 0.89	102 / 38.8	72 / 21.2	6853	0.49 / 3.37	87.5 / 25.6	55° EFT, Air Conditioning Duty
50 / 10	94 / 32.2	4.0 / 0.25	0.13 / 0.89	105 / 40.5	75 / 24.2	6833	0.49 / 3.37	88.5 / 25.9	55° EFT, Air Conditioning Duty
50 / 10	95 / 32.2	4.0 / 0.25	0.13 / 0.89	110 / 43.3	80 / 27.2	6798	0.49 / 3.37	90.0 / 26.3	55° EFT, Air Conditioning Duty

Performance Calculated with using R-410A on Side-1 and Water on Side-2

Emerald Environmental Technologies

DATE: 12/11/18

DRAWN: JED

REV: 1 (1/2/19)

PERFORMANCE DATA

MODEL: IC-2545

ice 3

Use it or lose it.

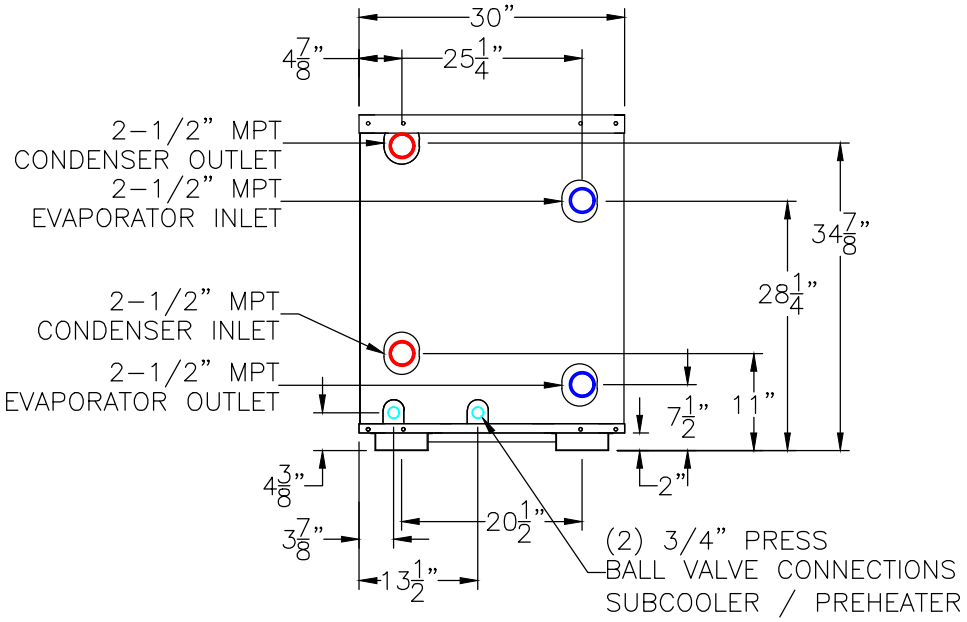

REAR VIEW

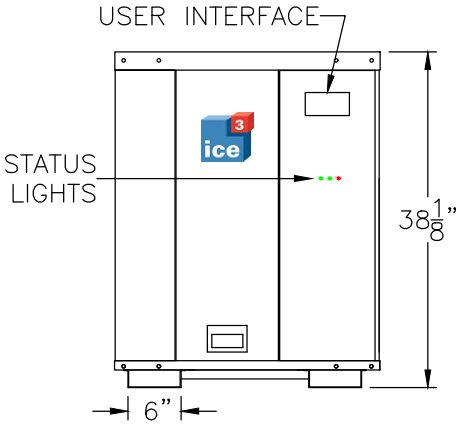

FRONT VIEW

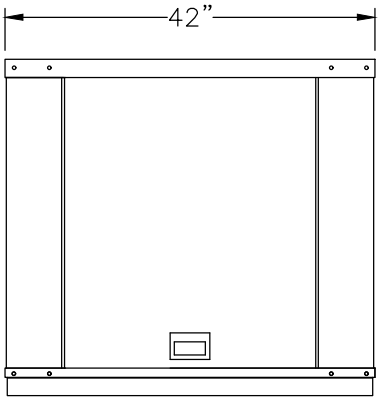

LEFT SIDE VIEW

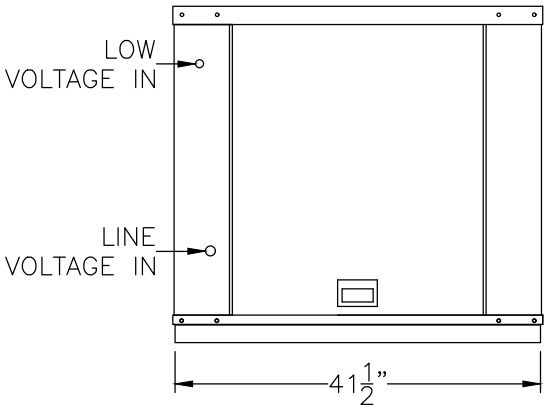

RIGHT SIDE VIEW

ice 3 Use it or lose it.	**EXTERIOR VIEWS AND DIMENSIONS MODEL: IC-2545**	**DATE: 12/11/18**	Emerald Environmental Technologies
		DRAWN: JED	
		REV:	

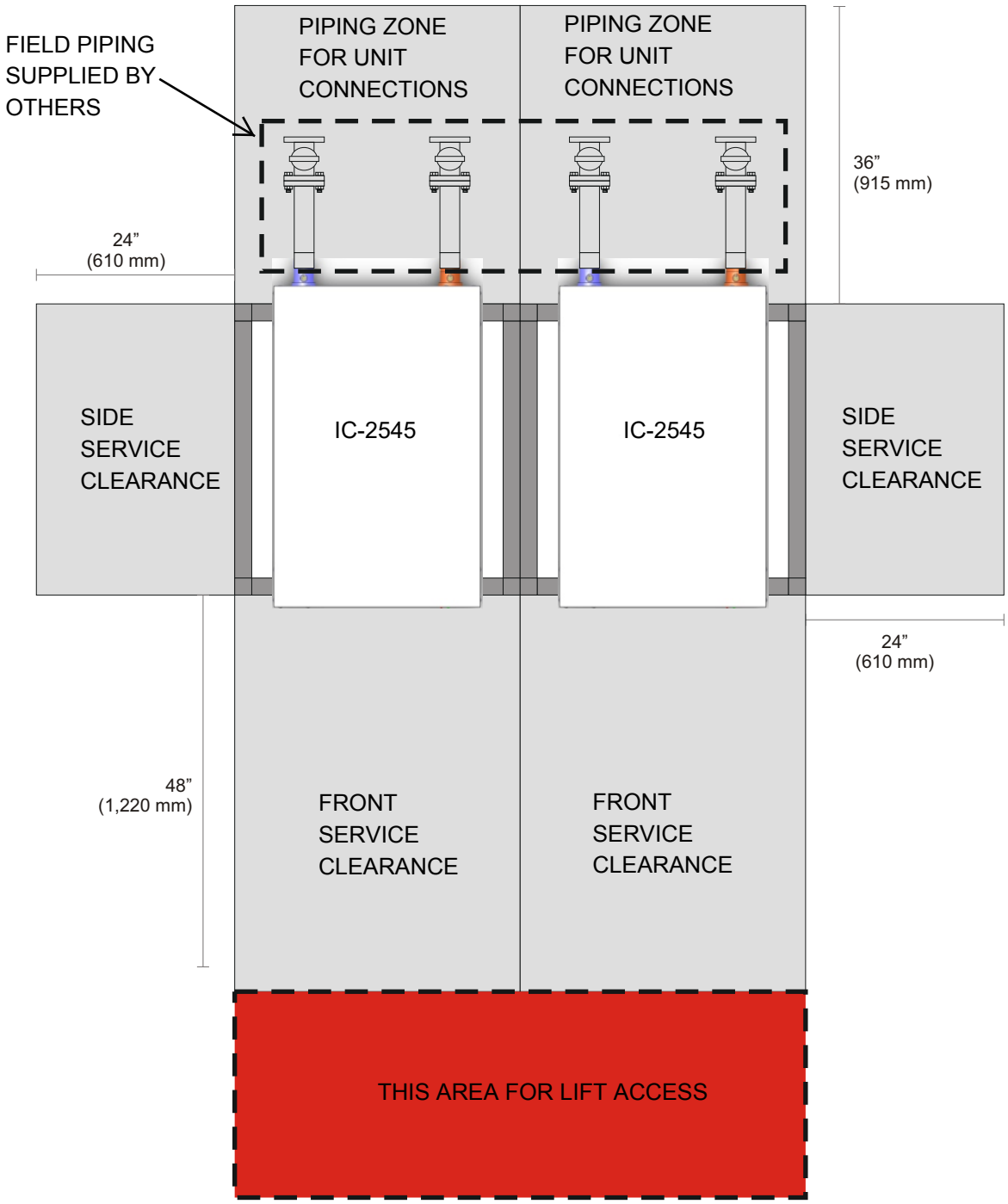

ice 3
Use it or lose it.

MINIMUM CLEARANCE REQUIREMENTS
MODEL: IC-2545

DATE: 12/11/18	
DRAWN: JED	
REV:	

Emerald Environmental Technologies

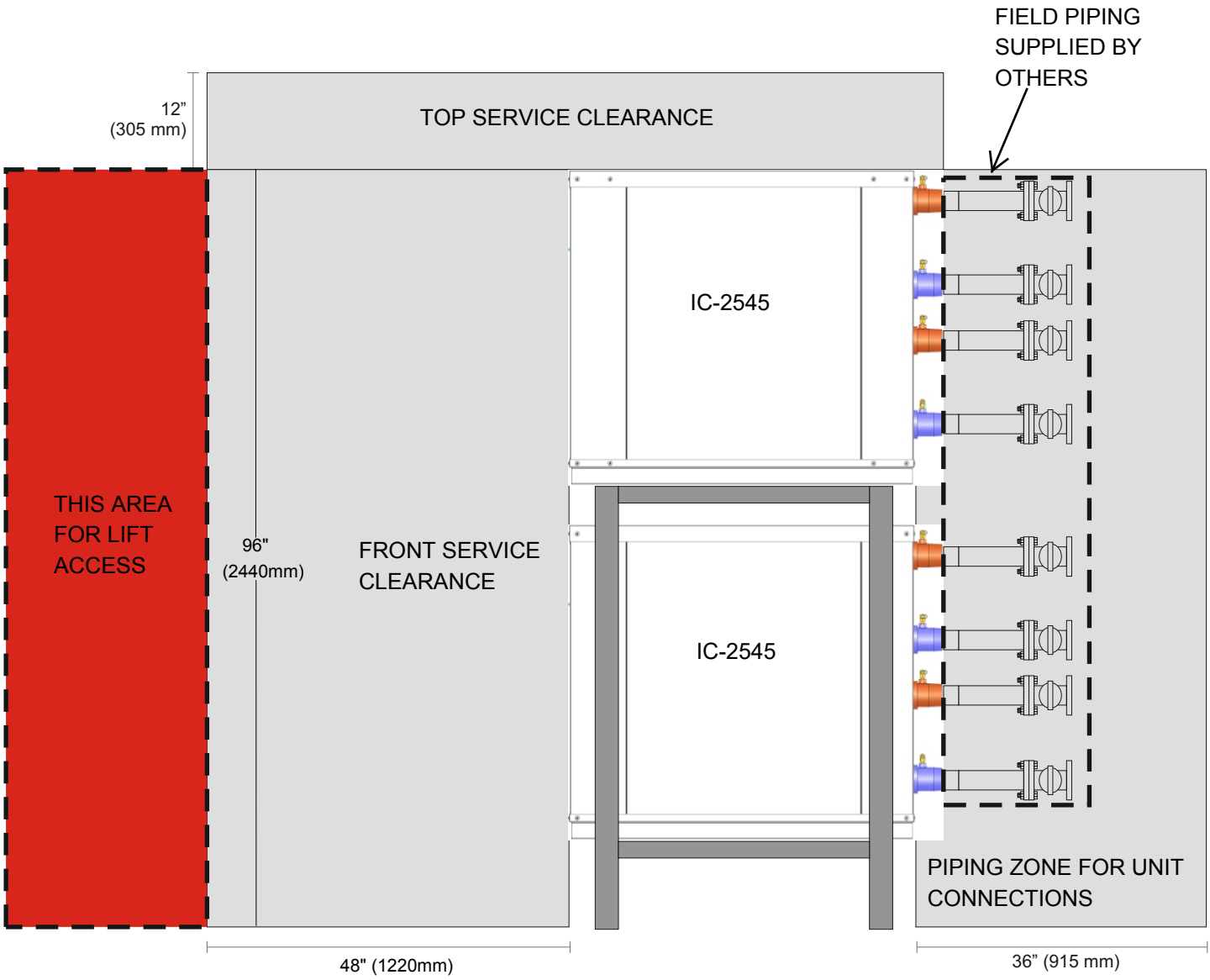

Side view

ice 3 Use it or lose it.	**MINIMUM CLEARANCE REQUIREMENTS MODEL: IC-2545**	**DATE: 12/11/18** **DRAWN: JED** **REV:**	Emerald Environmental Technologies

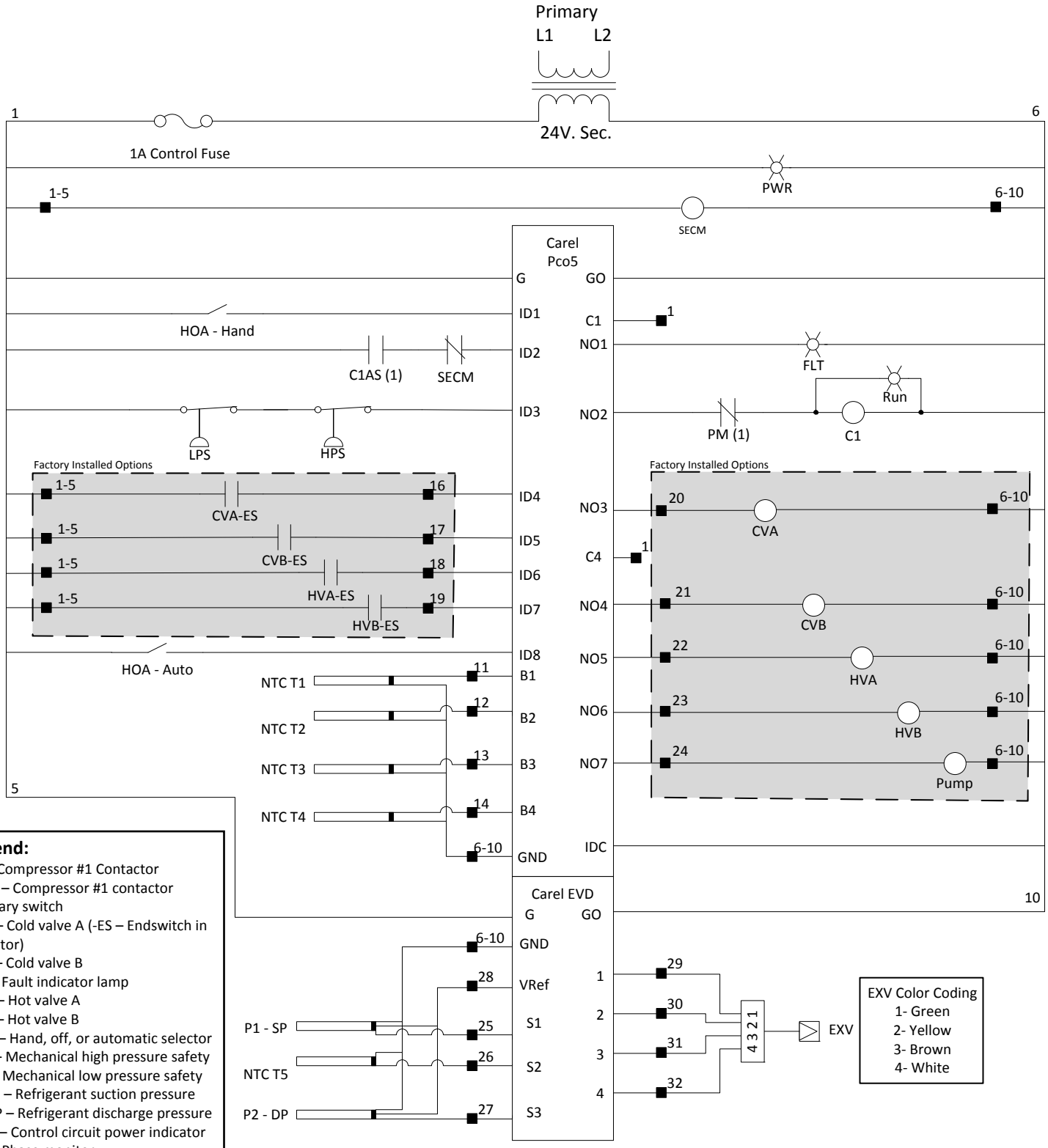

Legend:

C1 – Compressor #1 Contactor
C1AS – Compressor #1 contactor auxiliary switch
CVA – Cold valve A (-ES – Endswitch in actuator)
CVB – Cold valve B
FLT – Fault indicator lamp
HVA – Hot valve A
HVB – Hot valve B
HOA – Hand, off, or automatic selector
HPS – Mechanical high pressure safety
LPS – Mechanical low pressure safety
P1 SP – Refrigerant suction pressure
P2 DP – Refrigerant discharge pressure
PWR – Control circuit power indicator
PM – Phase monitor
SECM – Bitzer SE compressor module
T1- Entering evaporator temperature
T2 – Entering condenser temperature
T3 – Leaving evaporator temperature
T4 – Leaving condenser temperature
T5 – Refrigerant suction temperature

- Terminal Block Connection at #1

ice 3
Use it or lose it.

Model: IC-2545 Factory Control Wiring Diagram

DATE: 2/14/19	
DRAWN: JED	
REV: 1	
DWG NO. IC2040-D1	

Emerald Environmental Technologies

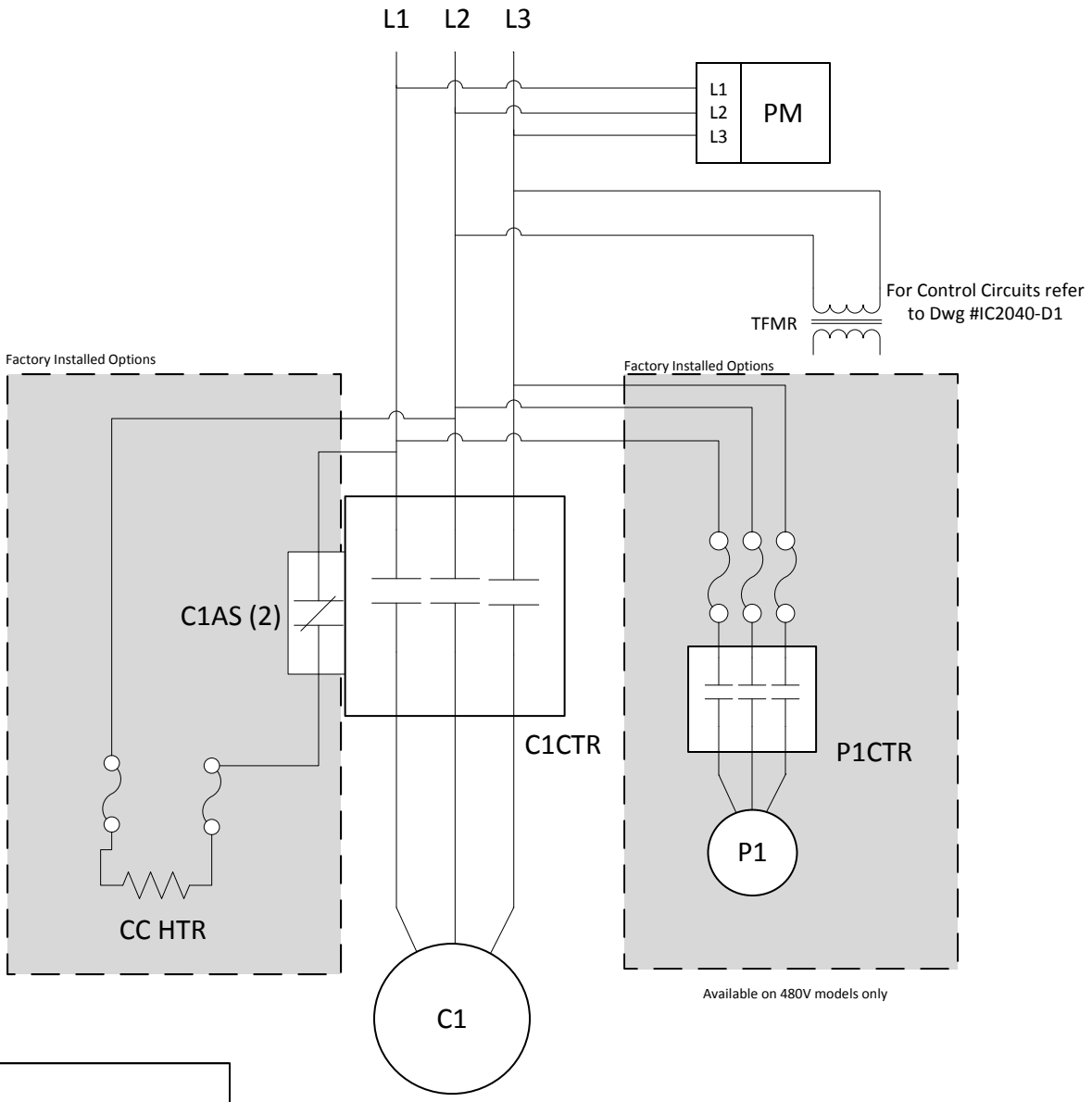

Legend:
CC Htr- Crankcase Heater
C1AS – Compressor Contactor Auxiliary Switch
C1CTR- Compressor #1 Contactor
C1 – Compressor #1
P1- Pump #1
P1CTR- Pump Contactor
PM – Phase Monitor
TFMR - Transformer

ice 3 Use it or lose it.	**Model: IC-2545 Factory Line Voltage Wiring Diagram**	DATE: 12/12/18 DRAWN: JED REV: DWG NO. IC2040-D2	Emerald Environmental Technologies